Does your ATV or motrocycle start only reluctantly? Backfire? Stall? Lose power at high rpm? Low rpm? Then maybe, just maybe, your ride needs a little tender, loving, carburetor care!

This article discusses Keihin CVK32 carburetor maintenance, but incorporates principles common to other models as well.

If you want to work on your carb, you'll need:

- Shop Manual
- Phillips-head screwdriver (for many uses)
- Small flat-blade screwdriver (for pilot screw adjustment
- Large flat-bladed screwdriver (for pilot and main jet) Wrench (for choke cable "starter" plunger cap)
- Clear flexible hose (for float bowl fuel level check)
- Pliers, etc. (for removing and installing fuel line)
- Scale (for measuring float height (17 mm (43/64 inch) on CVK32)
- Eye protection
- A vacuum cleaner may come in handy.
- Safety Note: Work on your fuel system only in a well-ventilated area, DO NOT SMOKE! Wear eye protection. Avoid skin contact with fuel and solvents;dispose of fluids properly.

What's Wrong?

Most carburetor problems range from high to low probability in this order:
· Contamination
· Improper adjustment
· Component failure

Contamination

Fuel and air flow into and mix together in the carburetor, a process critically dependent upon the dimensions of all the ports, channels, jets, passages, chambers, etc., therein. Any contamination, any foreign substance, can compromise any component's function, resulting in lousy running at some or all stages of operation.

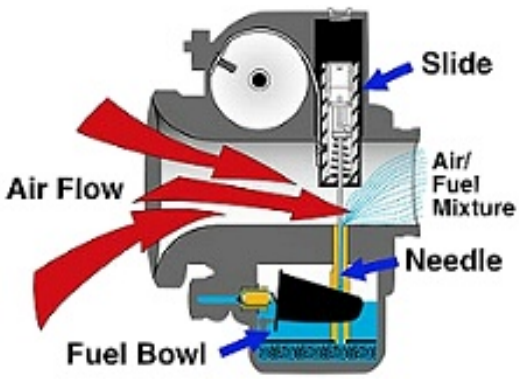

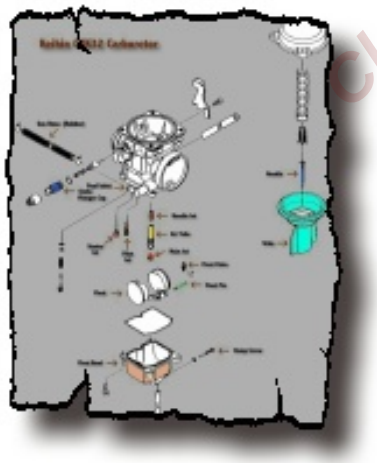

Gasoline itself remains a major source of contamination! In fact, unless stabilized, gasoline tends to gum up and ultimately form hard varnish over periods of long storage. The resulting sludge and crud can close down orifices, clog valves, etc. causing all sorts of mayhem. For preventive maintenance, always use fresh gasoline; when storage appears inevitable, treat the gas (in the can or in the ATV tank) with a fuel stabilizer like "STABIL," available at your friendly local auto supply emporium.

Classic Cycles Technical Resources

Moisture in the fuel is the most common source of contamination. Water may enter the fuel tank from condensation alone, never mind the "frog-strangler" thunderstorm or "playing submarine" in the creek. Water in the float bowl can cause high-speed "missing," as the carburetor drinks from the main jet, where the heavier fluid settles. Adding "fuel treatment" fluids to the tank help minimize this problem; draining the float bowl (as described later) occasionally is a good idea also.

Solid waste can honk up a carburetor as well, either through fuel or air ingestion. A tiny piece of trash can hold a float valve open, draining an entire gasoline tank through the dump tube. A leaf or twig ingested through the air intake can jam a butterfly (not to mention what unintercepted garbage can do to the engine internals). For preventive maintenance, an in-line gasoline filter (available over-the-counter at your favorite Pep Boys, et al) seems like a good idea (Why don't all manufacturers provide these devices factory-installed on their machines? In the bad old days of my misspent youth, engines sometimes came equipped with filters-cum-sediment bowls. But enough nostalgic digression!). Regarding a proper air supply, adequate air filtration (appropriately maintained by cleaning and lubrication) and plumbing appear as necessities.

O.K., Jim, you've told us what we should have done, but too late! What do we do now?

Wise men say, "Try the simplest, easiest, most obvious solutions first." Shut off your fuel petcock. Stick the carburetor dump tube, extending from the spout under the carburetor float bowl, into a suitable container. With a Phillips-head screwdriver, open the dump screw on the right side of the float bowl, draining the carburetor. Open the dump screw several turns (you want to open the hole large enough for passing pieces of trash). Observe the discharge in the container: any trash present? Open the tank petcock for a few seconds, until an uninterrupted flow issues from the dump tube, then shut her down. Any foreign material? Keep flushing the carburetor as long as garbage issues forth. If nothing shows, a few cycles provide all the advantage available from this procedure. When finished, close the dump screw, open the tank petcock, re-route the dump tube properly, and kick 'er off! If you've led a clean, righteous life, your problem may be solved! If problems persist, read on.

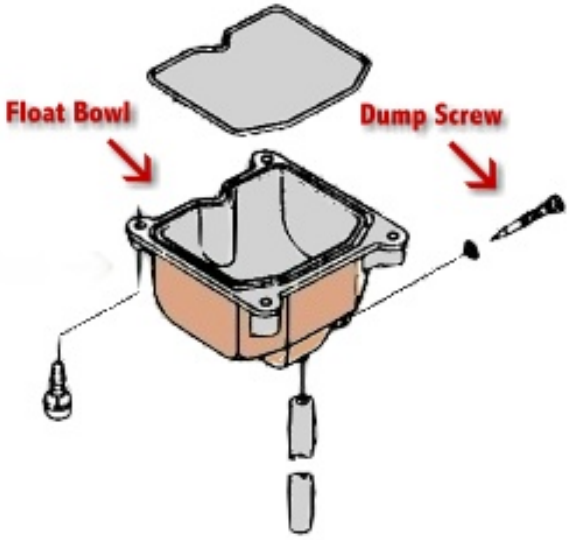

Chemical Warfare

The next easiest possible solution: add some miracle fluid to your tank, a fluid whose "millions of tiny scrubbers" solve all your problems as you ride. A host of "carburetor and fuel injector cleaners" repose on dealers' shelves; mix this stuff according to your tank capacity (I favor a solvent-rich mix, exceeding the concentration recommended by the manufacturers). With a little bit of luck, you may dissolve and incinerate the irritant as you ride, merrily, along. My Master Mechanic sources tell me the killer of all such gas tank solvents is GB44K, available from professional shops, but seldom from retail consumer auto supply sources.

But, AAAARRRRRRGGGHHHHH! You say you tried joy-juice in the tank, but still your problems remain? We must escalate our campaign! Auto parts and supply stores sell spray-can carburetor cleaner. Buy a can, insert the plastic tube nozzle, and follow directions helpfully printed on the aerosol can. ALWAYS WEAR EYE PROTECTION!

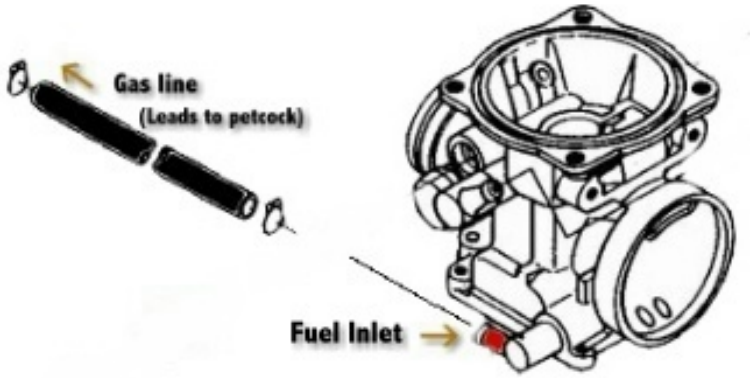

Going a little farther, Stage I: Shut off fuel petcock. Drain carburetor into container. Remove fuel line at carburetor input. Insert carburetor cleaner spray can nozzle into carburetor fuel inlet port. Spray the Dickens out of that sucker, until pure carb cleaner flows into container. Reconnect the fuel line and cycle the float bowl with gasoline as before; shut the drain screw and giver 'er a try.

Going a little farther, Stage II: After spraying carb cleaner directly into the float chamber as above, connect a length of fuel line to the carburetor. Insert the fuel line into the hose of your Wet-or-Dry Shop-Vac. Restrict the vacuum cleaner hose opening with your hand, providing maximum pressure differential to the fuel line and let 'er roar! After a minute or so, restore machine to operational configuration and see if everything is all better (don't forget closing the drain screw!).

* "Going a little farther, Stage II: **WARNING:** DON'T EVEN THINK ABOUT USING A VACUUM CLEANER AROUND YOUR RIG IF THERE IS THE SLIGHTEST POSSIBILITY OF ELECTRIC-SPARK IGNITON OF FLAMABLES. CHECK YOUR VACUUM CLEANER MANUAL."

You may want to try one more trick before you monkey further with the carburetor. Yamaha makes a dynamite carb cleaner. Mixed three parts of gasoline to one part concentrate (I think, read the can) and poured directly into the carburetor through the fuel line, this stuff gets your carb squeaky clean. Be sure to drain this elixir COMPLETELY when finished.

Going even farther, Stage III: You've completed Stages I and II, but problems persist. Shut off tank petcock. Drain carburetor. Loosen hose clamps on both engine and airbox sides of carburetor mixture/air hoses. Looking into the engine, rotate carburetor clockwise as far as possible without excessive binding (mind the choke cable connection!). From the left side of the quad, take a long Phillips-head screwdriver and loosen the four screws holding the float bowl; remove the float bowl and the idle adjustment control bracket. Squirt the carburetor cleaner with abandon into the pilot jet, main jet, around the float valve; wherever you can reach. Don't neglect the float bowl! The well, the bottom part, of the float bowl provides a hideaway for trash. Purge well! Further, this partial disassembly provides an opportunity for removing anything on the interior float bowl surface, a source of potential future problems. When finished, button 'er up, righten up the carb and tighten the fore and aft hose clamps, close the dump screw, and turn on the fuel petcock. Any luck? If not, we've gone just about as far in the cleaning department as possible without carb removal and disassembly. Advance (or retreat?) to the next section!

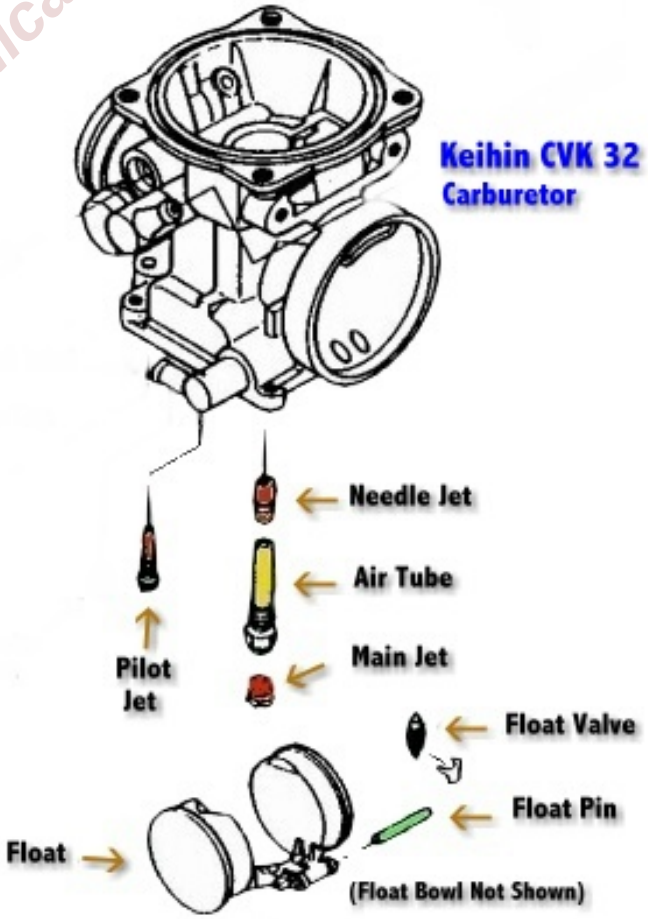

Classic Cycles Technical Resources

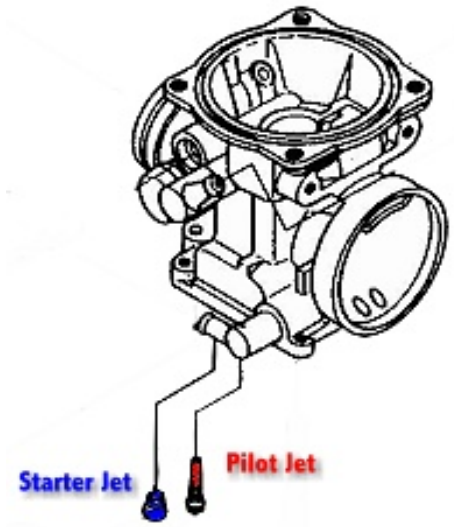

Adjustment

If starting/idling/backfiring on throttle let-off problems surface, pilot screw adjustment may solve them. A small flat-blade screwdriver, inserted into the pilot screw slot at the bottom of the carb body, "bottoms" the pilot screw (not too tightly; over-torqueing can bugger the screw tip and/or seat/jet). Withdraw the screw to the initial starting (or, as computer nerds might say, "default") position (2-1/8 turns on the Keihin CVK32). If excessive backfiring on throttle let-off occurs, back the screw out further, fuel-enriching the idle mixture. Generally speaking, a too-rich (fuel-wise) mixture does no harm; a too-lean mixture can cause problems, like valve-burning. I etched a file mark on the carb corresponding to the pilot screw slot orientation when I found the optimum position for my machine. You may need to adjust idle speed for the slowest smooth idle after setting the pilot screw.

Some problems result from improper float level setting; you may check the float chamber fluid level without removing and disassembling the carb. Park on a level surface. Connect a clear flexible hose to the dump spout on the float bowl, or connect a clear hose extension to the dump tube. Make a "U" with the tube, its transparent section held against the carburetor at its intersection with the float bowl. Open the dump screw and observe the fuel level height after it settles relative to the intersection between the carburetor body and the float bowl. The Keihin CVK32 tolerance is 0.5 mm +/- 1.0mm above the intersection. If the fuel level deviates from the specification, you're about to see what the carburetor inside looks like; adjustment involves bending the float valve tang. Don't forget to close the dump screw when finished with this check!

If the quick-and-dirty cleaning routine comes up short, and/or the float level needs adjusting, you must disassemble your carburetor after removal from the quad. Removal involves: Shut off fuel petcock; drain carburetor. Disconnect throttle cable by opening throttle valve manually (not with thumb lever), thread cable outward through slot, and remove cable end disc from its hole. You've now freed the cable from the carburetor, but the cable sheath remains connected through its bracket. Remove the bracket from the carburetor body by unscrewing the bracket screw (perhaps storing the screw back in its hole after bracket removal). Loosen carburetor hose clamp screws, fore and aft. Disconnect breather hose atop left side of carb. Disconnect fuel line. Wiggle carb in hoses until free of airbox and engine intake hoses; rotate carb to expose choke cable plunger cap connection so you can unscrew the choke cable with a wrench or pliers or your fingers. Withdraw choke cable (moving the choke lever "on" helps here) and remove carb.

Carburetor disassembly appears pretty straightforward; take off the four top screws, removing cap, diaphragm, spring, spring seat, needle. Remove four float bowl screws, removing idle adjustment cable bracket, float bowl; remove pilot screw, spring, and whatever else you find in that hole; remove pilot jet, main jet, air bleed pipe; punch needle jet with your finger from the carb air intake passage and remove. Punch out float pin; lift float and float valve from carb. Time for a good cleaning of all metal (and plastic) parts.

The best cleaner is the industrial-strength stuff your shop uses; you may not have access to it (unless, maybe, you're willing to buy in 55-gallon drum quantities). And if you do get the stuff, you may expose yourself to an airdrop of ninja-suited EPA and OSHA inspectors on a commando raid. The Yamaha carb cleaner, sold in about quart-sized cans of concentrate, may be a lifetime supply, but it's worth the ten bucks or so it costs. I have used a five-dollar parts cleaner kit, purchased form my local discount auto parts store, consisting of a solvent bucket complete with bailed parts basket. Dump all the parts to be cleaned in the basket, slosh 'em around, and leave 'em for awhile. I believe the carburetor body needs cleaning, too; dunk it, making sure the fuel intake port and float valve passages get plenty soaked. Be sure all orifices of all parts are thoroughly cleaned, including the tiny holes in the air bleed pipe. SAFETY NOTE: Getting any solvent, even gasoline, on your bare skin is NOT a good idea; be careful. When finished, drain the parts and do whatever the solvent supplier says, like "air dry" or "rinse in water." Note: A carburetor condition can deteriorate to the point where no amount of solvents remove varnish buildup in tiny passages-these carburetors are "Dead On Arrival" (D.O.A.) and must, unfortunately, be replaced.

Carburetor reassembly is basically the opposite of disassembly; drop the needle jet in, small end first, followed by the air tube (when assembled correctly, the needle jet protrudes into the air passage). Hook the float valve on the float tang, carefully drop the float valve onto its seat, and insert the float pivot pin. Specified float height on the Keihin CVK32 is 17 mm, about 43/64ths of an inch, I think, if no metric scale appears. Note: Measurement of float height is facilitated by holding the carb at about a 30-degree angle, taking some load off the contact between the tang and the float valve pin. The measurement is made when the tang TOUCHES the pin with the float valve seated; not when the pin and its spring are COMPRESSED. Bending the tang ever so slightly adjusts float height. (After reassembly and installation, check the float bowl fuel level with a clear flexible tube as previously described.)

Reinstalling the carb, position the carburetor so you can connect the choke cable plunger cap FIRST! Otherwise, you'll be mucho cramped for space, attempting manipulation of that jewel; setting the choke lever "on" assists connection. Careful when you're jacking the carburetor around subsequently in the installation process, that you don't yank the choke connection from its purchase. You'll never have a better shot at this connection than at the start of installation. Reconnect everything; fuel line, air breather tube, and throttle cable. Fit the carb intake and output ends into their respective hoses; save the hose clamps for last because you may want to rotate the carb, giving you better access to the throttle bracket screw; the bracket forks a stud on the carburetor body, held in position by a single screw. Open the throttle butterfly, thread the throttle cable through the slot, and drop the end disc into its hole. Align the carb and tighten the hose clamps. Turn on the fuel petcock (remember: dump screw closed!) and fire her up! Having performed these procedures properly, you've pretty well eliminated the carburetor as your source of problems. Check that gaskets (o-rings) hold with no leaks present.

Component Failure

Classic Cycles Technical Resources

Every component deserves inspection throughout all procedures discussed. Pam Falcioni mentions: check that float valve "needle" and seat! A likely source of crummy idling, starting, etc. Anything bashed, scored, bent and so on needs repair or replacement. Common sense prevails. Do all parts function correctly, slide easily and seat tightly where they should? Make it happen!

Summary and Conclusion

Fuel contamination remains a carburetor's worst enemy; prevented by dry, fresh and/or stabilized gasoline and in-line filters. "Better living through chemistry" may clean your carburetor without removal and disassembly. Mind the basic carburetor adjustments, check component condition, and here's wishing you many maintenance- and trouble-free miles!

www.ClassicCycles.org

MOTORCYCLE PARTS & ACCESSORIES

Click on links below

Motorcycle Parts & Accessories

Dirt Bike Parts & Accessories

Harley Davidson Parts & Accessories

Motorcycle Helmet Closeout Sale

Japanese Motorcycle Original Equipment Parts

Save On All Motorcycle Tires

Motorcycle Jacket Closeout Sale

High Visibility Motorcycle Safety Gear

Cycle Gear – Free Shipping

Women's Motorcycle Riding Gear

Free Shipping On All Motorcycles

Save Up To 80% On All Car Parts